DataSoft Corporation

Product R&D and Engineering Design Services
Tempe, AZ ▪ 480-763-5777 x401
www.datasoft.com ▪ sales@datasoft.com

Capabilities in
Embedded & Communications Systems
Design, Development & Integration

DataSoft Expertise

- **Wireless Hardware**
  - Software Defined Radio Development HW (30 MHz – 4 GHz)
  - Custom RF Design, PCB, Digital Design, Mechanical, Rapid Prototyping
  - WiFi & Bluetooth accessories for tactical radios; SOM for IoT Gateways & sensors
- **Real-time Embedded Software**
  - BSP, Boot Loaders, File Systems; Kernel development, Device Drivers
  - Peripherals: UART, WiFi, BT, USB; ARM, DSP, Vybrid, microprocessors
- **IP Networking Software:**
  - IPv4/IPv6 networking; Layer-2 bridging, routing; QoS, Bandwidth mgt; policy; traffic prioritization; congestion avoidance; MANET management software
- **Application Software:**
  - C, C++, Java, GUI, Netbeans, Eclipse, GWT, Linux, Android
- **Waveform Porting Tools:**
  - Probes, API Verification, Nimbus SDK
- **Test & Verification:**
  - ATE design, environmental test, test fixtures

Differentiators

- Intellectual Property: SDRs, IoT module, IP-networking software libraries, low power embedded computing device
- Exporter of radio products and software to France, UK, Poland, Brazil, and India
- Rapid prototyping capability in RF and mechanical systems
- CSfC solution (under NSA evaluation) for Secret & below wireless communications. 14 Phase II SBIRs that have led to exports, COTS products, and licensing agreements.
- Track record of winning & performing on government and IRAD projects for primes
- Silver-level Samsung Partner for developing secure Apps on Knox 2.4

Products and Projects

Microburst SDR

Thunder Development & Test Platform

Test Automation

Network Status Visualizer App

Software Probe Toolbox for SDRs

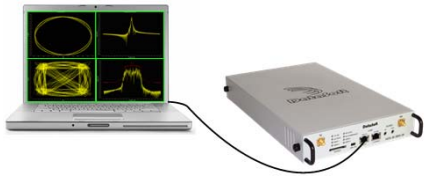

Embedded PC board stack

MUOS & ATIP (NMT)

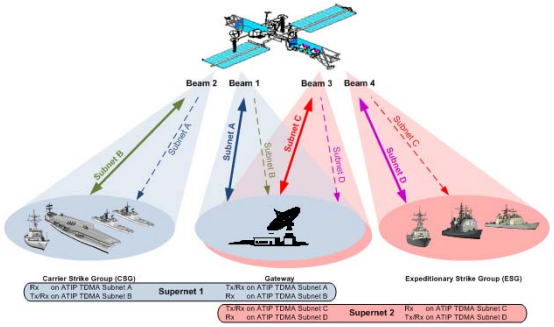

Network Security

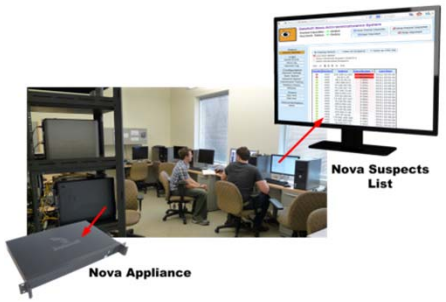

Business Model

DataSoft Capability	Business Model
HW & SW Products	Direct Sales, OEM, Licensing, Overseas VAR
Custom Design Services	T&M, FFP, royalty
Govt. design & development RFPs	Cost-plus; T&M, FFP

Export/ITAR Experience:

- Registered with Dept. of State as a Manufacturer & Exporter
- Exported ITAR-controlled HW & SW to France, UK, Brazil, Poland, India, Canada
- Partners in UK, India, Poland
- Interests from Argentina, South Africa, Australia, Singapore, Israel
- Investing in export compliance training, monitoring ITAR reform for Category XI items

Tactical Radio Connectivity

- Bluetooth v2.1+EDR, BLE v4.0
- uC and uP with memory
- Protocol conversion software
- Secure IP encryption

M2M development kit

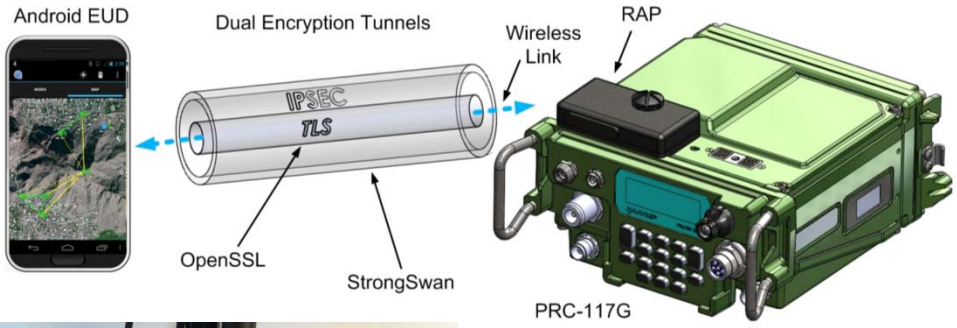

Connectivity for multiple tactical radios

	SideBridge (v1)	SideBridge (v2)	SideBridge (v2)	SideBridge LCD	SideLink	SideMate	SideBridge RAP	SideBridge DAP
								
Radio model	AN/PRC-154/A	PRC-154(A)	PRC-152(A)	PRC-154(A)	MBITR2	MBITR2 w/SIAM	AN/PRC-117G	N/A
Radio brand	Rifleman Radio	Rifleman Radio	Falcon III	Rifleman Radio			Falcon III	
Radio manufacturer	GD / Thales	GD / Thales	Harris	GD / Thales	Thales	Thales	Harris	
SideBridge platform	OMAP	Vybrid	Vybrid	Vybrid	OMAP	OMAP	Vybrid	??
Bluetooth	Yes	Yes	Yes	Yes	Yes	No	Yes	Yes
WiFi capable	Yes	Yes	Yes	Yes	Yes	No	Yes	Yes
GPS	No	No	No	No	Yes	No	No	No
External USB	No	Yes	Yes	Yes	Yes	Yes (x2)	Yes	No
External Serial	No	No	No	No	No	No	No	Yes
External Power	No	No	No	No	No	Yes	Yes	Yes
Type 1 encryption	No	No	No	No	No	No	Yes	Yes
Other		MMP in development	Uses Adapter Plate		Wide/Narrow Band I/O	MBITR2/SIAM I/O		Connect serial devices
Status	Complete	Complete	Complete	Prototype	Complete	Complete	Prototype	Planned Development

- All dongles have CPU and memory to host applications
- Bluetooth and WiFi can be turned off
- All dongles run Linux OS
- WiFi, Bluetooth, GPS

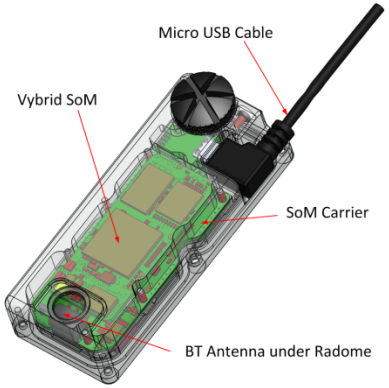

Android Apps

- BlueLink, SRW Contacts, PLI Cam
- Android kernel, VPN, multicast
- Various devices – Nexus, Atrix, Galaxy, Note, Zoom, Tab, etc.

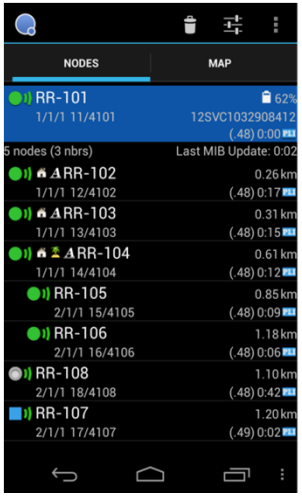

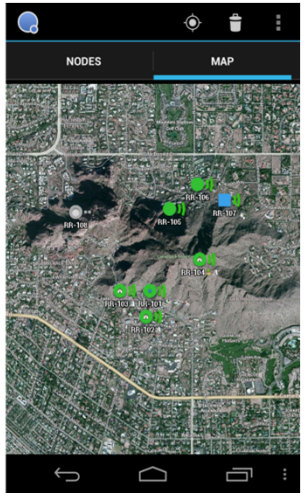

Industrial Design / Rapid Prototyping

- SideBridge designs for multiple radio models
- Custom 3D Printing with ABS
- Quick-turn metal shops
- Solidworks

SDR Development Systems

		
Thunder-H	**Thunder-L**	**Microburst**
Range: 400 – 4000 MHz	Range: 30 – 1600 MHz	Range: 30 – 3800 MHz
RF BW: 40 KHz – 40 MHz	RF BW: 40 KHz – 40 MHz	RF BW: 1.5 MHz – 28 MHz
Use: Development of waveforms	Use: Development of waveforms	Use: Development of waveforms to deploy on Microburst SDR

DataSoft SDR platforms are fully programmable development platforms with TI GPP/DSP/Xilinx FPGAs, complete software environments with example applications for advanced waveform and IP development covering all communications bands

Features

- Affordable, **wide-band**, high performance baseband and **RF development** and test platforms with low phase noise, excellent spurious performance, fast hopping transceivers with multiple external interfaces
- All feature a 3-board system: Baseband, RF Transceiver, and FEM with Xilinx Spartan-6 FPGAs and TI DM3730 OMAP GPP/DSP
- GiGE interface for high speed connectivity from MATLAB/GNU Radio/Host directly to the WF FPGA.
- Nimbus SDK for waveform development/porting
- Probe Toolbox -- real-time multi-processor debugging tool that includes Data probe, Resource probe, Latency probe, Traffic probe, SCA Adapter probe
- Models:
  - Thunder-Low: 30 MHz – 1600 MHz
  - Thunder-High: 400 MHz – 4000 MHz
  - Microburst: 30 MHz – 3800 MHz

Applications

- SDR Development Platform
- Waveform & Algorithm Development
- Test automation
- Cognitive Radio, TV White Spaces, LTE
- Academic R&D & Rapid Prototyping

Probe Toolbox for SDRs

Probes for Waveform Development, Debug or Porting

Real-time debugging tool with ability to prove and excite waveform elements for waveform porting, integration or validation

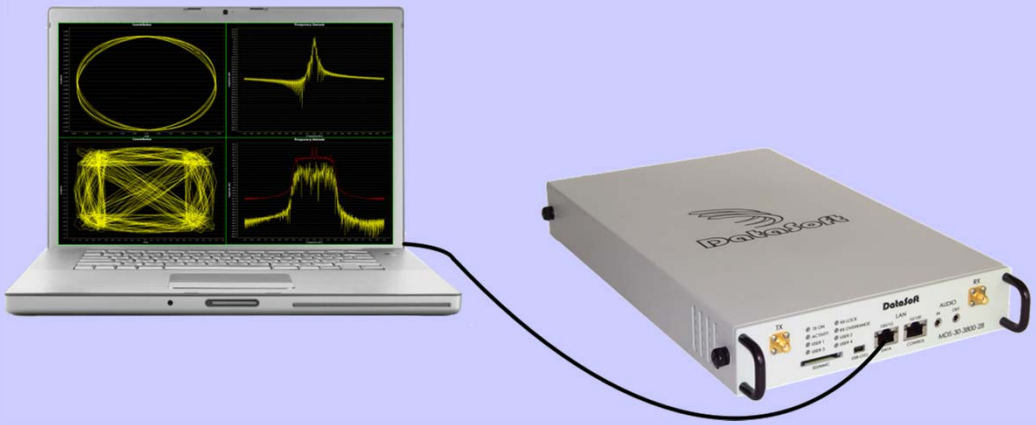

Using the Probe Toolbox, the waveform developer can study critical waveform and platform traffic on multiple processors and the interaction between the processors

Probe Toolbox software is part of the Nimbus Software Development Kit provided with all DataSoft SDR platforms

Features

- Data Probe
  - Inject or capture GPP/DSP stream data
  - Synchronize and trigger multiple probe points
  - Capture block data
  - Interface to MATLAB/Simulink
- Resource Probe
  - Memory and CPU utilization graphs
  - CPU resource detail
  - Memory peeks and pokes
- Latency Probe
  - Capture and display timestamp information with a synchronized time base across the GPP/SDP
- Traffic Probe
  - Capture and display network traffic
- SCA Adapter Probe
  - Integrated with PrismTech's Spectra Core Framework to show traffic, latency, and data in an SCA environment
- Applications
  - Validate waveform and platform data by applying probes at varying points in the GPP and DSP
  - Gather data in heterogeneous multiprocessor environment

Testing facilities

- Complete electronic labs
- Network analyzer, signal analyzer/generator, oscilloscopes, temperature chamber, etc.
- LabView, customized test software, ATE

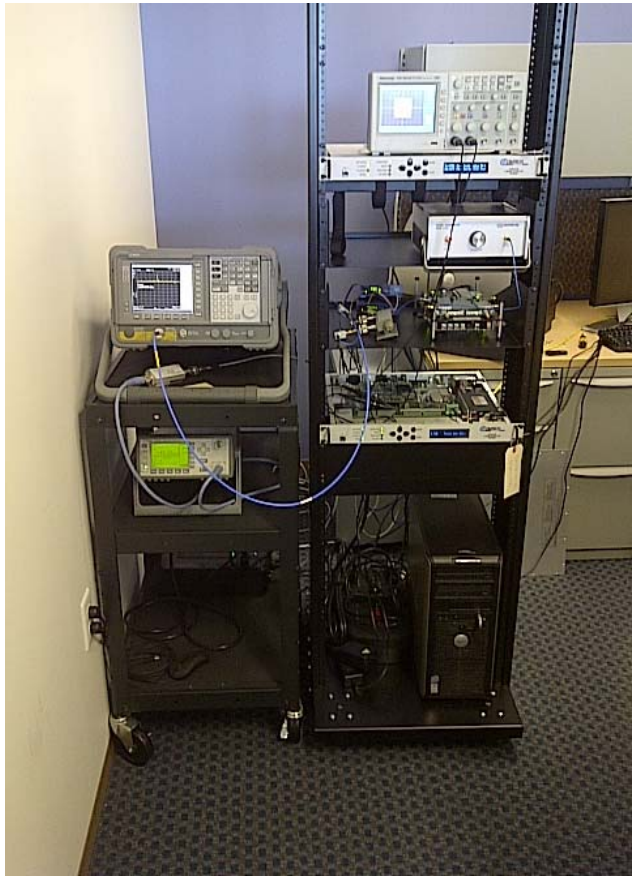

MMP: MANET Management Protocol

SBIR Phase II A12-047	Resources Management in Peer-to-Peer Mobile Ad Hoc Network Communications Environments
Goals	• **Efficient** use of wireless medium; enable better **scalability** in MANETs • **Disruption-tolerance**: don't assume network is low-delay or high-reliability • **Adapt dynamically** to current local network conditions
Methods	• **Software Agents**: a decentralized approach that distributes tasks and intelligence across the entire network • **Clustering**: a self-forming and self-healing overlay network of MMP agents that facilitates efficient network-wide broadcast/gathering functions • **Adaptive Forwarding**: a store-and-forward mechanism combined with QoS-like throttling of monitoring traffic
3 Protocols	• **Clustering Protocol**: forms the overlay network of agents in any IP-based network, e.g., SRW, WNW • **Inter-Agent Protocol**: Disruption tolerant forward of network mgt data • **Configuration Protocol**: Allow network manager to control agents, could be replaced by OTAM
So What?	• Complements OTAM, which is slated to be the "killer app" for SDRs • Can run inside radio, or, on dongles • Can be in-band, or, use WiFi or Bluetooth too • Applications not limited to network management. • Other network functions can also be more efficient. • Saving bandwidth translates directly into saving power.

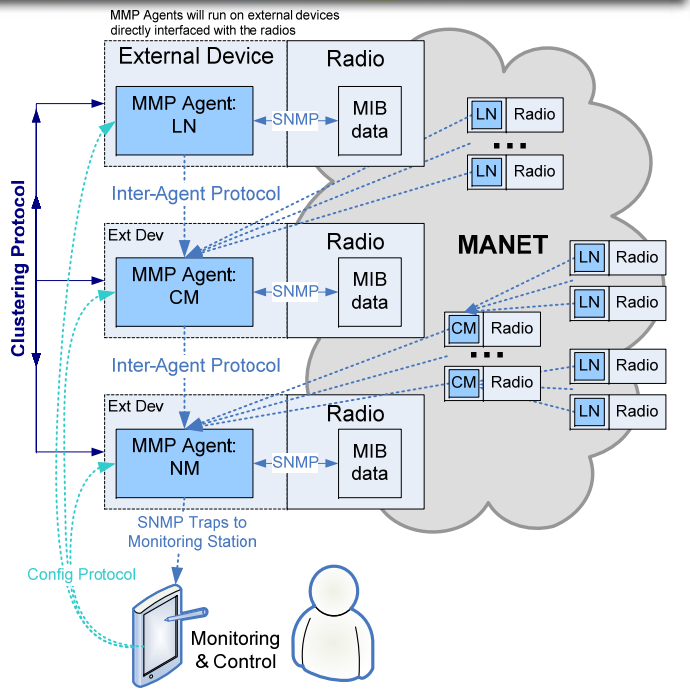

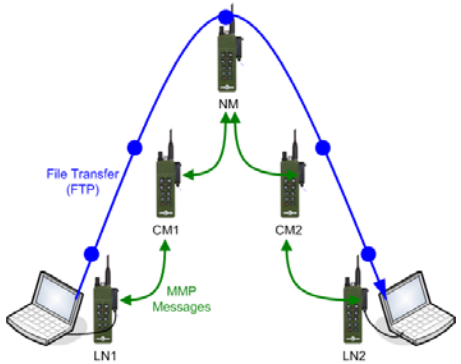

Automated Test Expertise

- **Simulation based Testing**
  - OPNET-based test bed
  - Data Collection & Analysis tools
  - HW-in-the-Loop (HWIL) testing
  - SW-in-the-Loop (SWIL) testing
- **ATE Design & Development**
  - STE design & fabrication
  - PC-based control via GPIB bus
  - Virtual RF Environment
  - LabView and Teststand
  - Data logging & analysis

HWIL & SWIL test-bed

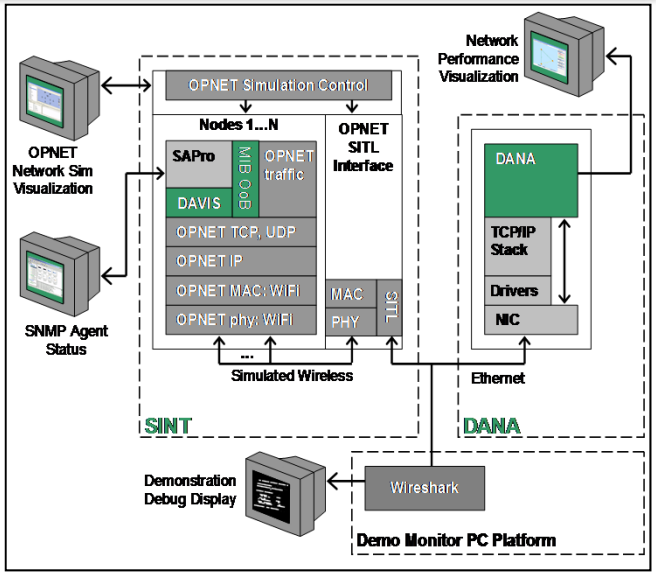

Radio Emulator design for JTRS AMF

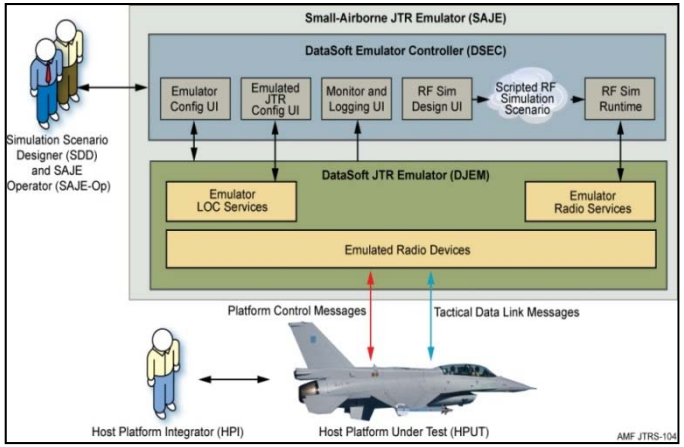

Test Automation using LabView

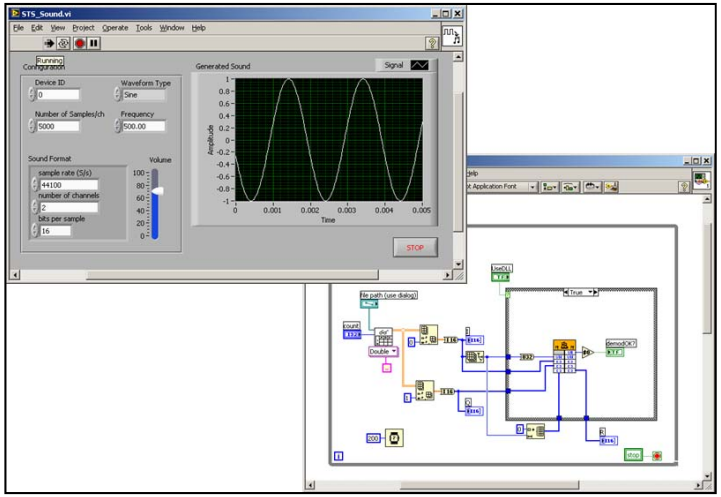

Waveform Porting/Analysis

- Waveform Development Environment
  - SCA-compliant SDR; Drivers, BSP, Loading tools
- SRW, WNW, MUOS experience
  - Porting and test support of MUOS WF to JTRS HMS platform
  - Updated and maintained CAI waveform requirements and design artifacts
  - Waveform Performance Characterization and Analysis
  - RSS API Extensions to support MUOS on JTRS HMS and AMF JTRS
- Waveform Probe Toolbox
  - Data Probe; Resource Probe; Latency Probe; Traffic Probe; SCA Adapter Probe
- Portability/Complexity Analysis Tool
- SCA API Compliance verification tool, approved & used by JTEL/JTNC
- System Engineering to support HAIPE 3.x and IPv6 for MUOS and WNW

WF Development & SCA Compliance tools

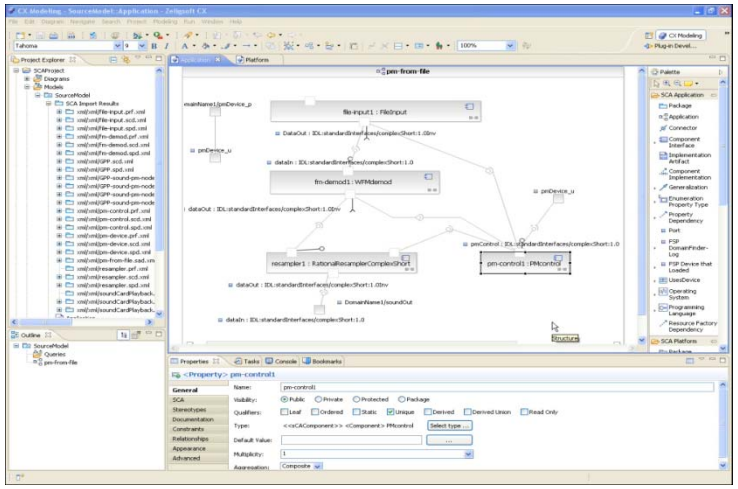

SW Probes & custom board

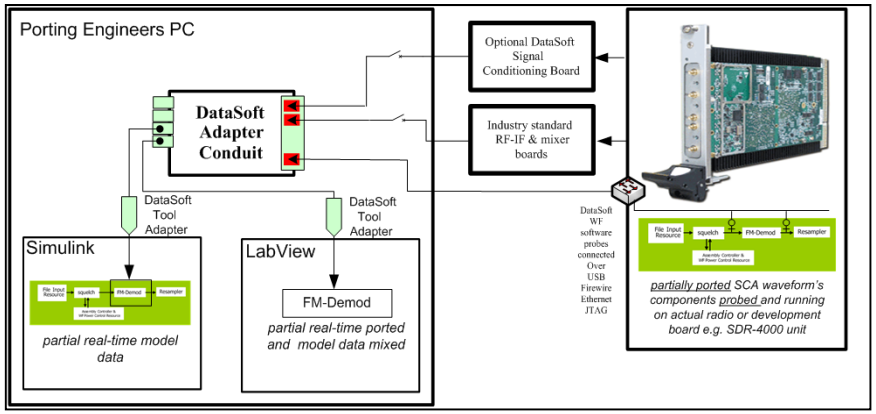

Real-time Embedded Software & Information Assurance

ATIP supports Navy NMT

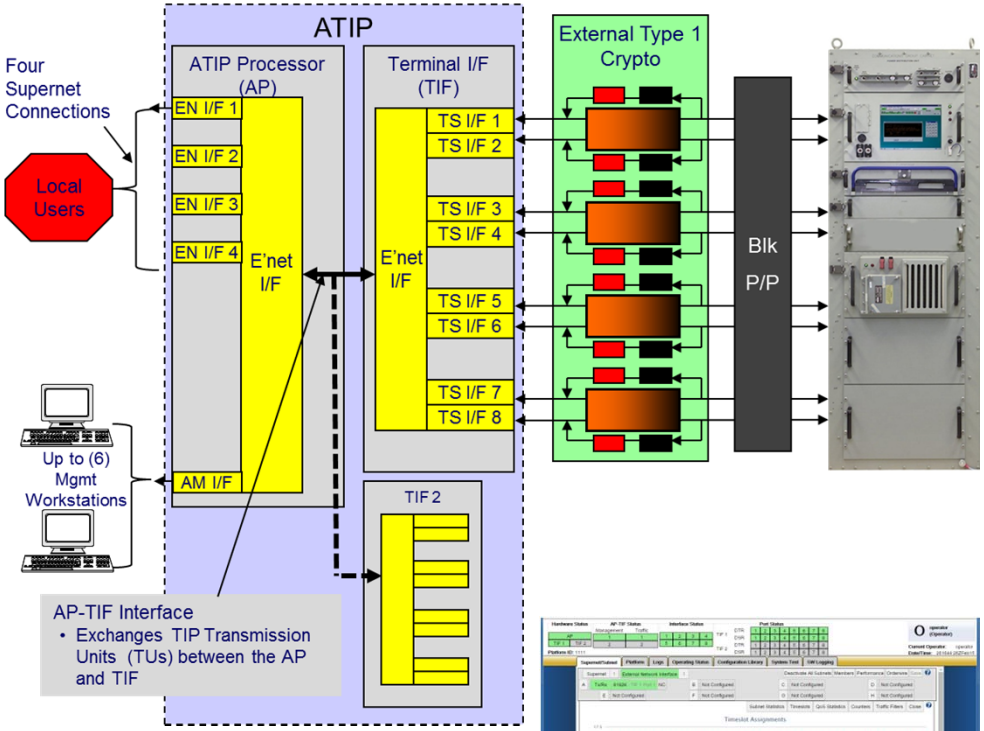

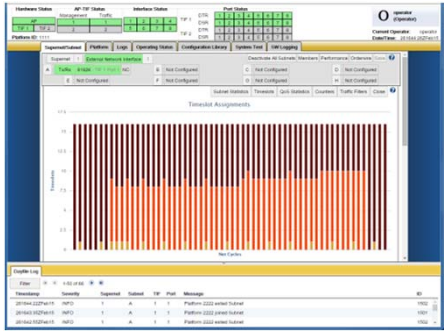

Advanced TDMA Interface Processor (ATIP)

- IP Layer-2 Ethernet bridging device
- Element of Navy Multiband Terminal (NMT)
- Supports ADNS and BMDS Networks
- Features:
  - Rack mounted COTS servers based on RT-Linux
  - Open, modular, scalable architecture
  - IPv4/IPv6 networking & QoS enhancements
  - Information Assurance & Security
  - Prioritization and Dynamic Bandwidth Allocation
  - Framing for multiple data streams
  - Adaptive Coding enhancements
  - Web based control & configuration system
  - CMMI 3 development process

Other experience

- Linux, VxWorks, GHS Integrity
- BSP, PSP, Boot loader, Radio control library
- Device Drivers – Ethernet, audio, USB, UART
- Radio Devices, Radio Control, RF Control,
- DSP modules device drivers and sample apps

NOVA Cyber Security System

- Honeypot-based anti-reconnaissance software for IP based networks
- Gives network admin time to pinpoint, isolate, and remove threats
- Combines lightweight virtualization, attacker classification, automated alerts for asset protection
- Pre-configured appliance with web-based interface
- Complements Intrusion Detection & Anti-Virus systems

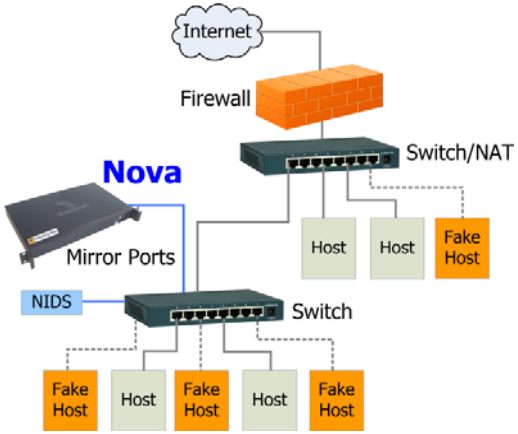

Haystack example

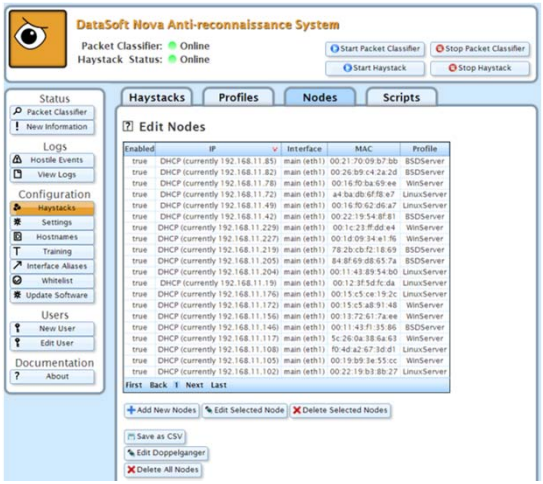

Intruder Classification

Intruder Details